HEAT TREATMENT AND FINAL FINISH

PHYSICAL PROPERTIES	
Y. P.	
T. S.	
EL. 2	
RED	
BR	
ROCK	
SCL	

SEPTEMBER 17, 1943

REVISIONS

6	8-19-48		

DRG. PERTAINS TO

51-84-1	30 BMG M19A4 (FLEX)
51-125-1	30 BMG M19A6

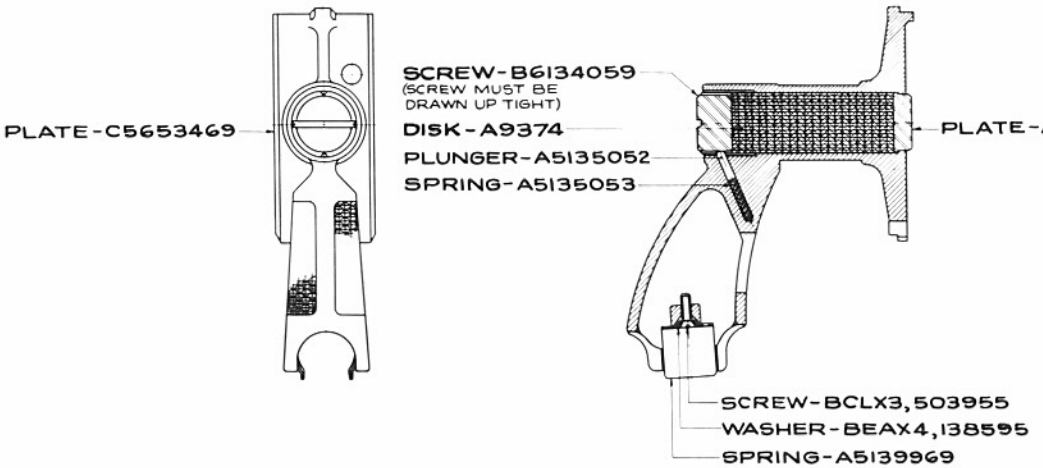

PLATE, BACK W/BUFFER, ASSEMBLY (7100059)

SUPERSEDES C7100059 W/O/C 8-19-48

0 1 2 3 4 5 IN.

DO NOT INSCRIBE PART NO.

C 7100059

TOLERANCE ON DIMENSIONS NOT OTHERWISE SPECIFIED
DECIMAL ± ___
FRACTIONAL ± ___
ANGULAR ± ___

DRAFTSMAN	TRACER	C O G DRAFTSMAN
R.J.M.	Z.C.	
LEAD MAN		CHIEF DRAFTSMAN

SUBMITTED:
H.H. Roe

APPROVED BY ORDER OF THE CHIEF OF ORDNANCE
Walter Ackerman
ORD. DEPT. U. S. A.

ORDNANCE DEPT., U. S. A.

MADE AT ROCK ISLAND ARSENAL

C7100059

A 5020581

HEAT TREATMENT & FINAL FINISH	PHYSICAL PROPERTIES					
HEAT TREAT TYPE II FINISH, CLASS B	Y. P.		RED.		SCL.	
	T. S.		BR.			
	E. L. 2		ROCK	C43-49		

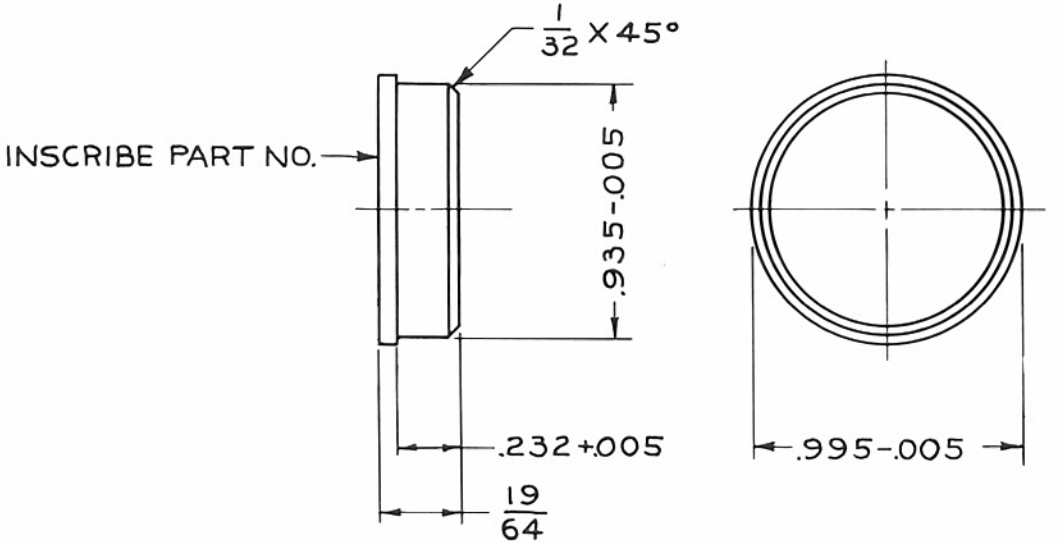

PLATE, BUFFER

STEEL FS1045 (5020581)

FINISH 125

WAS A20581

SCALE 2/1

A 5020581

JUNE 1, 1931

REVISIONS

17	5-10-48			

DRG. PERTAINS TO

C5591794	.30 BMG M17A1 (WC)
C5621039	.30 BMG M19A4 (FXD) M19A5 (FXD)
C7100059	.30 BMG M19A4 (FLEX) M19A6

DO INSCRIBE PART NO.

TOLERANCE ON DIMENSIONS NOT OTHERWISE SPECIFIED
DECIMAL ± —
FRACTIONAL ± 1/64
ANGULAR ± 5°

DRAFTSMAN	TRACER	L'D'G DRAFTSMAN
W.C.O.	A.V.C.	
CHECKER L.S.C. [illegible]	O.O.	CHIEF DRAFTSMAN

SUBMITTED:
A. W. Roe
ORD. DEPT., U. S. A.

APPROVED BY ORDER OF THE CHIEF OF ORDNANCE
Walter Ackerman
ORD. DEPT., U. S. A.

ORDNANCE DEPT., U. S. A.

MADE AT ROCK ISLAND ARSENAL

A5139969

HEAT TREATMENT & FINAL FINISH	PHYSICAL PROPERTIES					
HEAT TREAT TYPE II FINISH, CLASS B	Y. P.		RED.		SCL.	
	T. S.		BR.			
	EL. 2		ROCK	A-73-76		

JUNE 26, 1936

REVISIONS

15	8-19-48		

DRG. PERTAINS TO

C7100059	.30BMG M19A4 (FLEX) M19A6

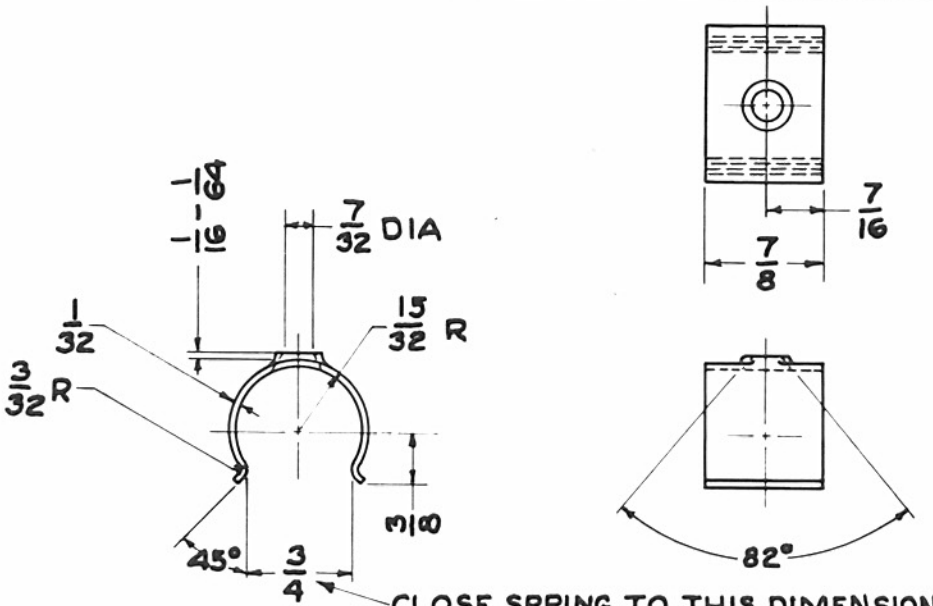

CLOSE SPRING TO THIS DIMENSION BEFORE HARDENING

DEVELOPE LENGTH 2 1/2 IN. APPROX

SPRING, STOCK (5139969)

STEEL WD1095

WAS A139969

SCALE 1/1

A 5139969

INSCRIBE PART NO. DO NOT

TOLERANCE ON DIMENSIONS NOT OTHERWISE SPECIFIED
DECIMAL ±
FRACTIONAL ± 1/64
ANGULAR ± 2°

DRAFTSMAN	TRACER	L'D'G DRAFTSMAN
E.J.L.	O.K.	
CHECKER C.E.F. EWR	O.O.	CHIEF DRAFTSMAN

SUBMITTED:
A. W. Roe
ORD. DEPT., U. S. A.

APPROVED BY ORDER OF THE CHIEF OF ORDNANCE:
Walter Ackerman
ORD. DEPT., U. S. A.

ORDNANCE DEPT., U. S. A.

A5135052

HEAT TREATMENT & FINAL FINISH	PHYSICAL PROPERTIES					
HEAT TREAT TYPE II FINISH, CLASS B	Y. P.		RED.		SCL.	
	T. S.		BR.		C.C.	.004 TO .006 DEEP
	EL. 2		ROCK			

JUNE 1, 1931

REVISIONS

17	8-19-48			

DRG. PERTAINS TO

C5591794	.30 BMG M17A1 (WC)
C7100059	.30 BMG M19A4 (FLEX) M19A6

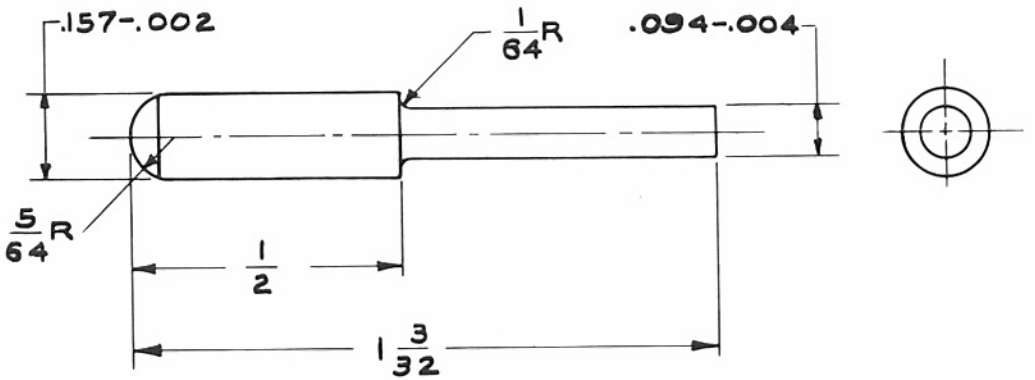

INSCRIBE PART NO. DO NOT

TOLERANCE ON DIMENSIONS NOT OTHERWISE SPECIFIED
DECIMAL ± —
FRACTIONAL ± 1/64
ANGULAR ± —

DRAFTSMAN	TRACER	L'D'G DRAFTSMAN
W.C.Q.	E.R.G.	
CHECKER	O.O.	CHIEF DRAFTSMAN
P.H.V.		

PLUNGER, ADJUSTING SCREW

STEEL FSX1020

FINISH 125

(C) 5135052

SUBMITTED:
A. W. Roe
ORD. DEPT., U. S. A.

APPROVED BY ORDER OF THE CHIEF OF ORDNANCE:
Walter Ackerman
ORD. DEPT., U. S. A.

WAS A135052

SCALE 4/1 | A | 5135052

ORDNANCE DEPT., U. S. A.

A 5135053

HEAT TREATMENT & FINAL FINISH	PHYSICAL PROPERTIES					
DRAW AT 450°F TYPE I FINISH, CLASS OSC BAKE ONE HOUR AT 300-350°F	Y. P.		RED.		SCL.	
	T. S.		BR.			
	EL. 2		ROCK			

DIAMETER OF WIRE	.027
TOTAL NUMBER OF COILS	15
MINIMUM INSIDE DIAMETER, FREE	.095
MAX. OUTSIDE DIA AT MIN OPER. HT	.159
FREE LENGTH	.83±.03
TYPE OF ENDS	SQUARED & GROUND
WOUND	R.H.
MEAN ASSEMBLED HEIGHT	.700
LOAD AT MEAN ASSEMBLED HT	3.8LB±.5LB
MIN OPERATING HEIGHT	.669
LOAD AT MIN OPER HT	4.7LB±.5LB
LB PER INCH OF SPRING DEFLECTION	29 APPROX
SPRING FUNCTIONS IN HOLE	.160
SPRING FUNCTIONS OVER ROD	.094
CALCULATED MAX. SOLID HT	.450

CAUTION: DO NOT COMPRESS SOLID.

SPRING, ADJUSTING SCREW PLUNGER (5135053)

SPRING STEEL WIRE

(WD1085 SPECIAL-CLASS A)

WAS A135053

A 5135053

JUNE 1, 1931

REVISIONS

19	8-19-48		

DRG. PERTAINS TO

C5591794	.30 BMG M17A1 (WC)
C7100059	.30 BMG M19A4 (FLEX) M19A6

INSCRIBE PART NO. DO NOT

TOLERANCE ON DIMENSIONS NOT OTHERWISE SPECIFIED
DECIMAL ± —
FRACTIONAL ± —
ANGULAR ± —

DRAFTSMAN	TRACER	L'D'G DRAFTSMAN
W.L.M.	E.B.	
CHECKER	O.O.	CHIEF DRAFTSMAN

SUBMITTED:

A. H. Roe

APPROVED BY ORDER OF THE CHIEF OF ORDNANCE:

Walter Ackerman
ORD. DEPT., U. S. A.

ORDNANCE DEPT., U. S. A.

HEAT TREATMENT & FINAL FINISH	PHYSICAL PROPERTIES						DEC. 1, 1926
	Y.P.		RED		SCL.		REVISIONS
	T.S.		BR.				
	FL. 2		ROCK.				

DRG PERTAINS TO	
C7100059	PLATE, BACK, W/BUFFER, ASM

REVISIONS			
12	7-5-39	16	12-20-41
13	10-19-39	17	6-17-42
14	7-1-40	18	7-7-42
15	8-27-41	19	11-2-43
20	1-13-44	21	3-27-44

DR'G. PERTAINS TO	
	ALL CAL. .30 BMG
51-78	.22 USMG-M1.
C64293	PLATE, BACK, SPADE GRIP, ASSEMBLY
C64294	PLATE, BACK, W/HORIZONTAL BUFFER ASM
B17692	PLATE, BACK, ASM.
C121039	PLATE, BACK W/BUFFER, ASSEM.
C 64010	PLATE, BACK W/BUFFER AND STOCK, ASSEMBLY
C91794	PLATE, BACK W/ BUFFER & STOCK, ASSY.

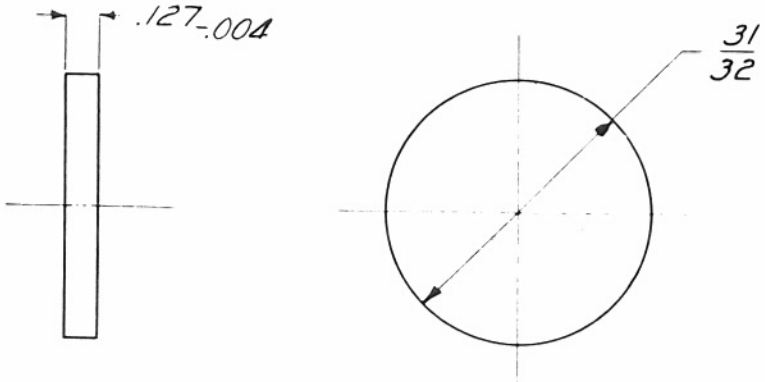

DISK, BUFFER (A-9374-3)

RED FIBRE

ALL EDGES MUST BE SMOOTH AND FREE FROM BURR & TEARS.

TOLERANCE ±.01 ALLOWED ON ALL DIMENSIONS UNLESS OTHERWISE SPECIFIED.

SUPERSEDES OLD TRACING A-9374 UNDER REVISION DATE OF JULY 5, 1939.

SCALE 2/1

A 9374

DIFFSMAN: L.O.L. | TRACER: L.O.L. | CHIEF DIFFSMAN: E.J.T.

CHIEF ENGR: M.E.B. | CHIEF DIFFSMAN: [illegible]

SUBMITTED: Walter Dorton, MAJOR

APPROVED BY ORDER OF THE CHIEF OF ORDNANCE: [illegible] LT. COL.

ORDNANCE

HEAT TREATMENT AND FINAL FINISH

HEAT TREAT
TYPE II FINISH, CLASS B

PHYSICAL PROPERTIES	
Y. P.	
T. S.	
EL. 2	
RED	
BR.	
ROCK.	
SCL.	
C.C.	.005 TO .010 DEEP

JUNE 1, 1931

REVISIONS

20	8-19-48		

B6134059

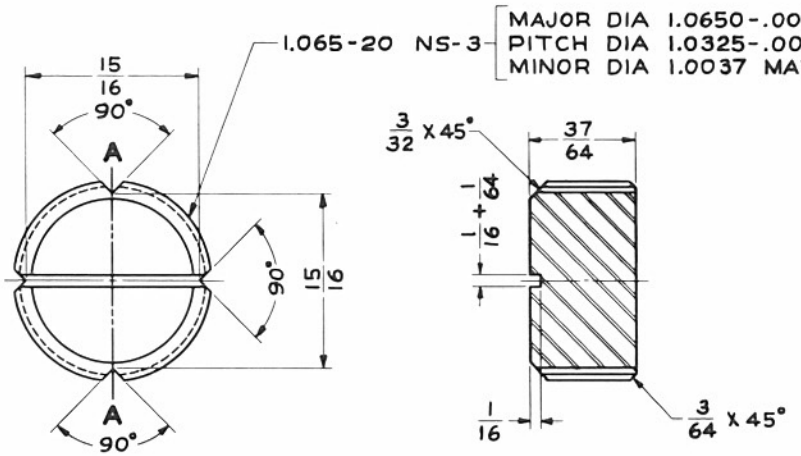

SECTION A-A

SCREW, ADJUSTING
STEEL F S X1335
FINISH 125

6134059

DRG. PERTAINS TO	
C5591794	.30 BMG M17A1 (WC)
C7100059	.30 BMG M19A4 (FLEX) M19A6

INSCRIBE PART NO. DO NOT

TOLERANCE ON DIMENSIONS NOT OTHERWISE SPECIFIED
DECIMAL ± —
FRACTIONAL ± 1/64
ANGULAR ± 5°

DRAFTSMAN	TRACER	L'D'G DRAFTSMAN
W.C.O.	L.R.E.	
CHECKED	O.O.	CHIEF DRAFTSMAN

SUBMITTED:
J. M. Roe
ORD. DEPT., U. S. A.

APPROVED BY ORDER OF THE CHIEF OF ORDNANCE:-
Walter Ackerman
ORD. DEPT., U. S. A.

ORDNANCE DEPT., U. S. A.

WAS B134059

SCALE 2/1 | B | 6134059

SCREW, MACHINE, FLAT HD. (NF-3)
COR. RES. STEEL

BCLX3

ORDNANCE DEPT. STANDARDS (ORDNANCE DESIGN)

APPROVED 5-15-31 DATE

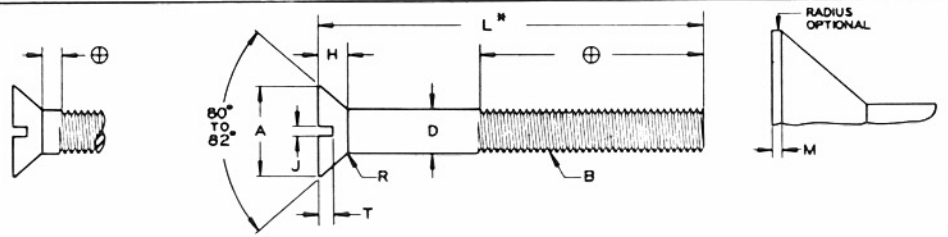

NOMINAL SIZE	#0	#1	#2	#5	#8	#10		
B THREADS PER INCH	80	72	64	44	36	32		
D DIAMETER OF BODY MAX.	.0600	.0730	.0860	.1250	.1640	.1900		
D DIAMETER OF BODY MIN.	.0502	.0622	.0740	.1079	.1435	.1670		
A DIAMETER OF HEAD SHARP MAX.	.119	.146	.172	.252	.332	.385		
A DIAMETER OF HEAD SHARP MIN.	.105	.130	.156	.232	.308	.359		
A DIAMETER OF HEAD ABS. MIN.	.101	.126	.150	.225	.300	.348		
M WIDTH OF FLAT MAX.	.002	.003	.003	.005	.006	.007		
H HEIGHT OF HEAD MAX.	.035	.043	.051	.075	.100	.116		
H HEIGHT OF HEAD MIN.	.026	.033	.040	.062	.084	.098		
J WIDTH OF SLOT MAX.	.023	.026	.031	.043	.054	.060		
J WIDTH OF SLOT MIN.	.016	.019	.023	.035	.045	.050		
T DEPTH OF SLOT MAX.	.015	.019	.023	.034	.045	.053		
T DEPTH OF SLOT MIN.	.010	.012	.015	.022	.029	.034		
R RADIUS MAX.	.025	.027	.031	.045	.055	.062		
L LENGTH	ORDNANCE PART NUMBER - STANDARDS - CORROSION RESISTING STEEL							
1/8		503932	503907					
3/16		503933	503908	544234	503951	544230		
1/4		503934	503939	503945	503952	503961		
5/16		503935	503940	503946	503953	503962		
3/8		503936	503941	503947	503954	503876		
1/2			503942	503875	503955	503877		
5/8				503948	503956	503963		
3/4				503949	503957	503964		
7/8					503958	503965		
1					503959	503966		
L LENGTH	ORDNANCE PART NUMBER - LIMITED STANDARDS - CORROSION RESISTING STEEL							
1/16	503925	503937						
3/32	503926	503938	503943					
1/8	503927							
5/32	503928	503906	503944					
3/16	503929							
7/32				503950				
1/4	503930							
5/16	503931							
7/16				502298		544267		
1/2					503960	503967		
1-1/4					541920			
1-5/16								
1-1/2						503968		
1				582803				

MATERIAL: STEEL, CORROSION RESISTING, GRADE 7A, SPEC. QQ-S-763, LATEST REVISION. DIMENSIONS IN INCHES.
NOMENCLATURE PATTERN: SCREW, MACHINE, FLAT HD., COR. RES. STEEL, #2 - 64NF-3 x 1/2", DRG. BCLX3, PART NO. 503942.
⊕ LENGTH OF THREAD: ON SCREWS 2" LONG OR SHORTER, THREADS SHALL EXTEND TO WITHIN TWO THREADS OF THE BEARING SURFACE OF THE HEAD. LONGER LENGTHS SHALL HAVE A MINIMUM COMPLETE THREAD LENGTH OF 1-3/4".
* TOLERANCE ON LENGTH: UP TO 1" MINUS 1/32; OVER 1" TO 2" MINUS 1/16; OVER 2" MINUS 3/32.
NOTE: PROCURABLE FROM FRANKFORD ARSENAL. THESE SCREWS ARE PRIMARILY FOR INSTRUMENT WORK.

SUPERSEDES BCLX3 WITH CHANGE 7-24-47

REVISION ⑦ 7-24-47 ⑧ 10-1-48 ⑨ 11-2-48

WASHER, LOCK, "TOOTH" TYPE
EXTERNAL TOOTH, COUNTERSUNK

BEAX4

ORDNANCE DEPARTMENT STANDARDS (COMMERCIAL)

APPROVED 5-11-33 DATE

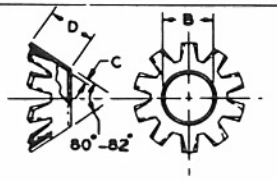

TYPE A

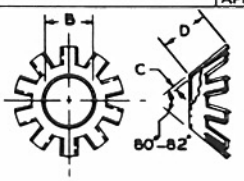

TYPE B

SIZE, NOMINAL		#4	#6	#8	#10	#12	#14 & 1/4
B INSIDE DIAMETER	MAX.	.123	.150	.177	.205	.231	.267
	MIN.	.113	.140	.167	.195	.220	.255
C THICKNESS	MAX.	.019	.021	.021	.025	.025	.025
	MIN.	.015	.017	.017	.020	.020	.020
D SIDE LENGTH	MAX.	.065	.092	.105	.099	.128	.128
	MIN.	.050	.082	.088	.083	.118	.113

MATERIAL	FINISH	ORDNANCE PART NUMBER					
STEEL	PLAIN	114611	114612	114613	114614	114615	114616
STEEL	CADMIUM OR ZINC PLATED	125817	138589	138593	138597	138600	138604
STEEL	NICKEL PLATED	125819	120155	120156	120157	120158	120152
STEEL	CHROMIUM PLATED	125818	138590	138594	129184	138601	138605
STEEL	PHOSPHATE COATED	125820	138591	138595	138598	138602	138606
STEEL	CORROSION RESISTING		431505	431506			

SIZE, NOMINAL		#16	5/16	3/8	7/16	1/2	
B INSIDE DIAMETER	MAX.	.287	.333	.398	.463	.529	
	MIN.	.273	.318	.383	.448	.512	
C THICKNESS	MAX.	.028	.028	.034	.045	.045	
	MIN.	.023	.023	.028	.037	.037	
D SIDE LENGTH	MAX.	.147	.192	.255	.270	.304	
	MIN.	.137	.165	.242	.260	.294	

MATERIAL	FINISH	ORDNANCE PART NUMBER					
STEEL	PLAIN	138608	114617	114618	114619	114620	
STEEL	CADMIUM OR ZINC PLATED	138609	134512	138617	125823	125829	
STEEL	NICKEL PLATED	138611	120159	120160	125825	125831	
STEEL	CHROMIUM PLATED	138610	138614	138618	125824	125830	
STEEL	PHOSPHATE COATED	138612	138615	138619	125826	125832	
STEEL	CORROSION RESISTING		583135				

MATERIAL: DIMENSIONS IN INCHES.

STEEL - SAE 1050 OR 1066 HEAT TREATED, ROCKWELL HARDNESS C40 - C50 OR EQUIVALENT.

NOTE: FOR SPECIFICATIONS, SEE DRAWING BEAX10.

NOMENCLATURE PATTERN: WASHER, LOCK, "TOOTH" TYPE, COUNTERSUNK, 3/8", DRG. BEAX4, PART NO. 114618.

NOTE: EITHER TYPE "A" OR TYPE "B" IS ACCEPTABLE.

ENGINEERING & INSPECTION SECTION- ORDIP

ORDNANCE DEPT. DEPT OF THE ARMY

SUPERSEDES BEAX4 WITH CHANGE 11-8-46

REVISIONS (7) 11-8-46 (8) 9-8-49

HEAT TREATMENT AND FINAL FINISH

TYPE II FINISH, CLASS B

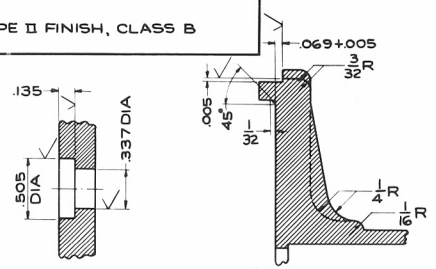

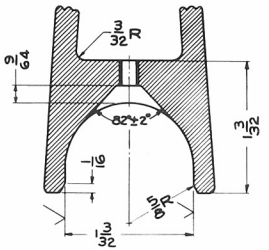

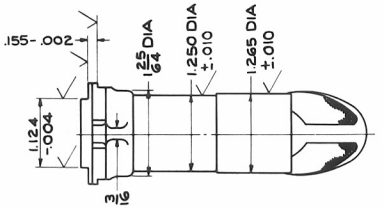

SECTION A-A
SCALE 2/1

SECTION B-B
SCALE 2/1

SECTION C-C
SCALE 2/1

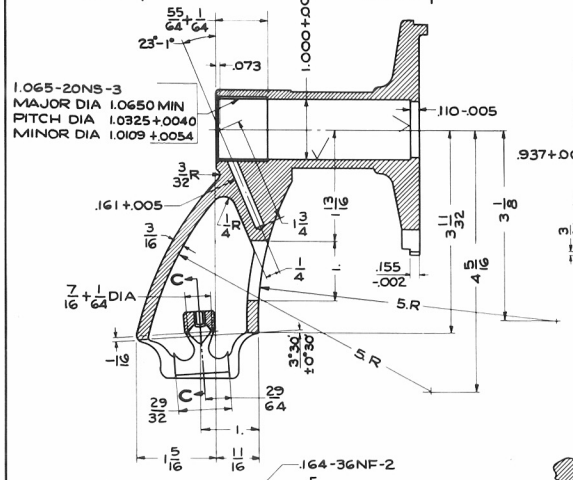

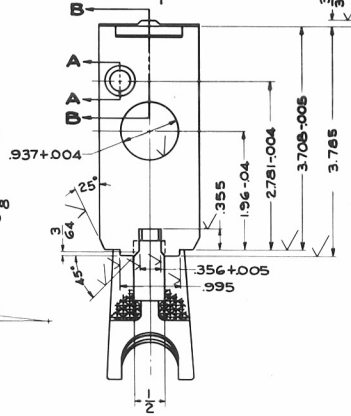

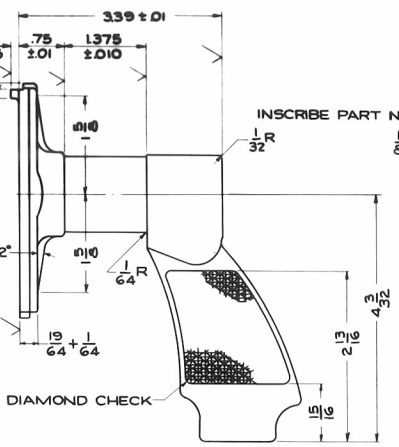

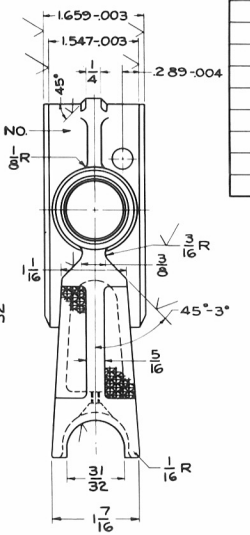

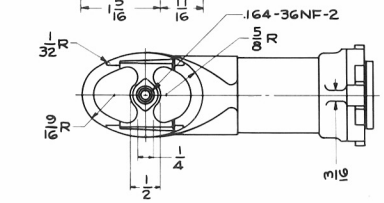

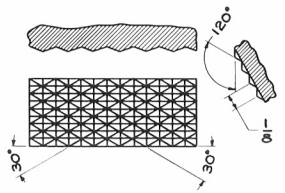

VIEW OF DIAMOND CHECK
SCALE 2/1

PHYSICAL PROPERTIES	
Y. P.	
T. S.	
EL. 2	
RED	
BR.	
ROCK.	
SCL.	

AUGUST 18, 1943 REVISIONS			
7	8-19-46		

DRG. PERTAINS TO	
C7100059	.30 BMG M1944 (FLEX) .30 BMG M19A6

PLATE, BACK
PEARLITIC MALLEABLE IRON - CLASS A (5653469)
FINISH √ TO BE 125

WAS C153469

INSCRIBE PART NO.

SCALE 1/1

C 5653469

TOLERANCE ON DIMENSIONS NOT OTHERWISE SPECIFIED
DECIMAL ±: .005
FRACTIONAL ±: 1/64
ANGULAR ±: 5°

DRAFTSMAN	TRACER	L.O.D. DRAFTSMAN
R. J. M.	Z. C	
CHECKED		CHIEF DRAFTSMAN

SUBMITTED:
H. H. Roe

APPROVED BY ORDER OF THE CHIEF OF ORDNANCE:
Wesley Richardson
ORD. DEPT. U. S. A.

ORDNANCE DEPT., U. S. A.

MADE AT ROCK ISLAND ARSENAL

C5653469

HEAT TREATMENT AND FINAL FINISH

PHYSICAL PROPERTIES	
Y. P.	
T. S.	
EL. 2	
RED	
BR	
ROCK	
SCL	

SEPTEMBER 17, 1943

REVISIONS			
6	8-19-48		

DRG. PERTAINS TO	
51-84-1	30 BMG M19A4 (FLEX)
51-125-1	30 BMG M19A6

C7100059

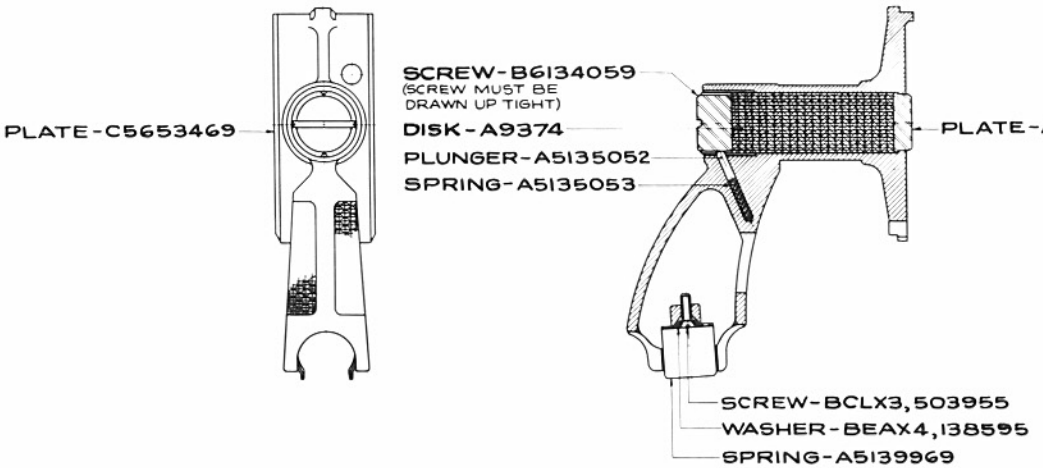

PLATE, BACK W/BUFFER, ASSEMBLY (7100059)

TOLERANCE ON DIMENSIONS NOT OTHERWISE SPECIFIED
DECIMAL ± .—
FRACTIONAL ± —
ANGULAR ± —

DRAFTSMAN	TRACER	C O G DRAFTSMAN
R.J.M.	Z.C.	
LIEUT USA		CHIEF DRAFTSMAN

SUBMITTED:
H.H. Roe

APPROVED BY ORDER OF THE CHIEF OF ORDNANCE
Walter Ackerman
ORD. DEPT. U. S. A.

ORDNANCE DEPT., U. S. A.

MADE AT ROCK ISLAND ARSENAL

SUPERSEDES C7100059 W/O/C 8-19-48

0 1 2 3 4 5 IN.

DO NOT INSCRIBE PART NO.
C 7100059